Dimension Drawing - SolidSwitch	
BMS800200104	SolidSwitch 104

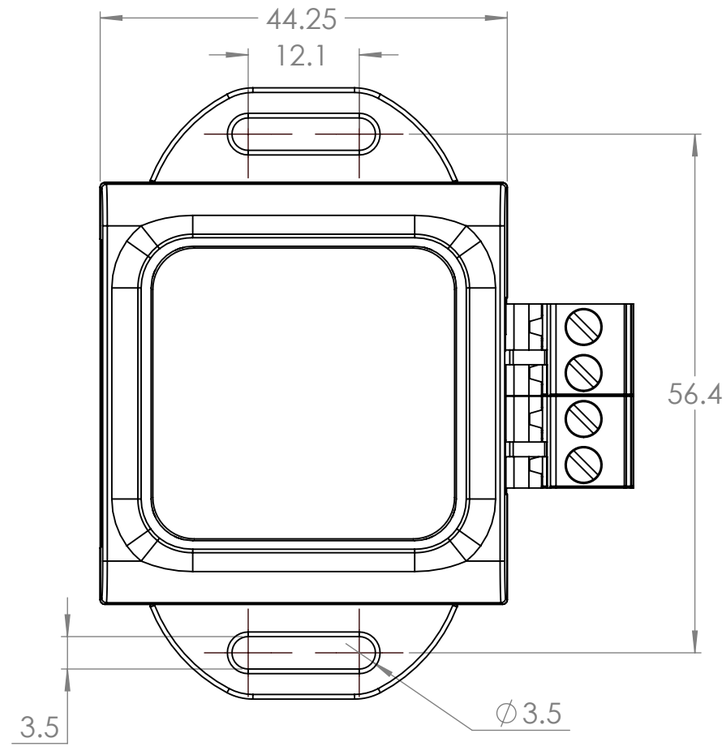

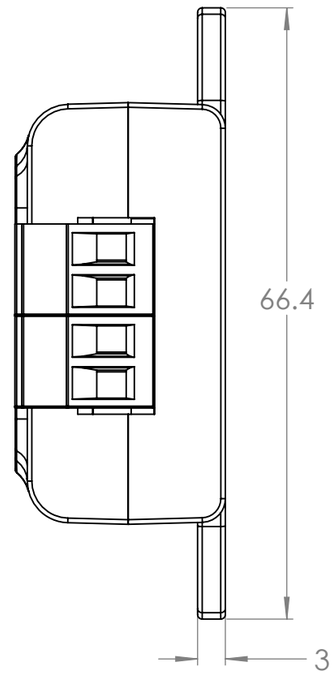

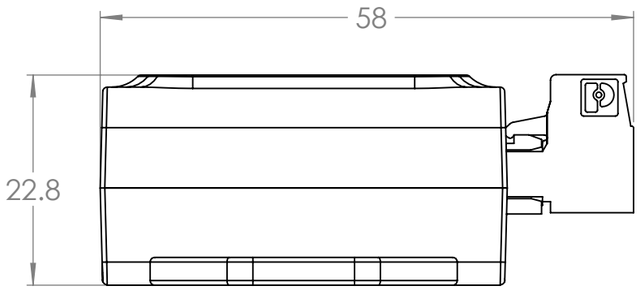

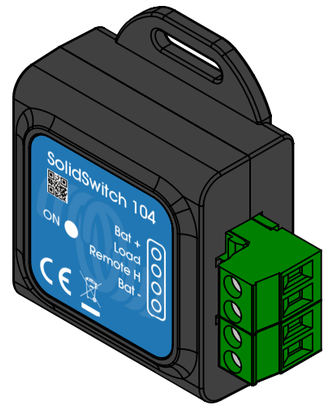

Dimensions in mm

victron energy
BLUE POWER

Rev01