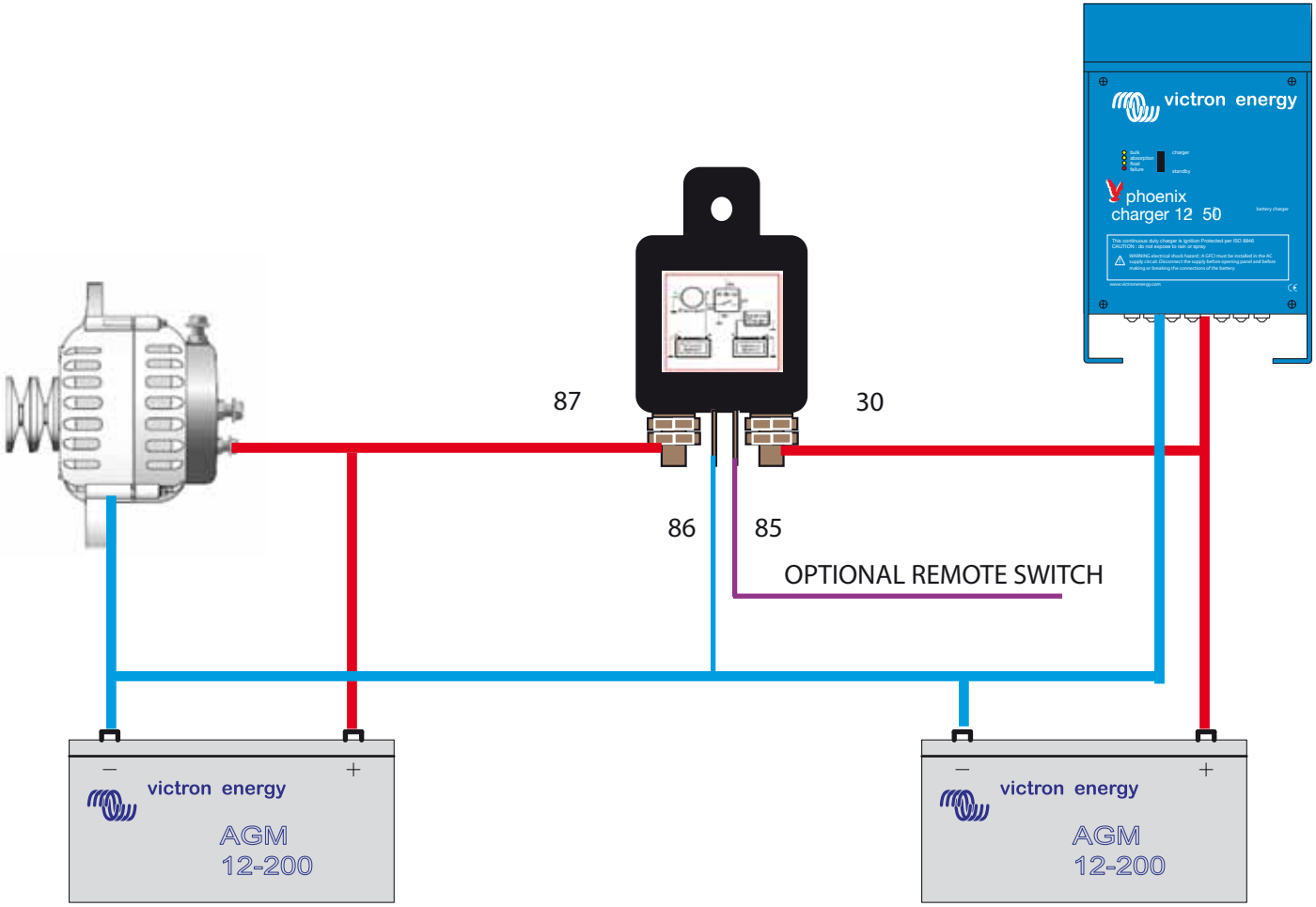
victron energy
phoenix
charger 12 50
87
30
86
85
OPTIONAL REMOTE SWITCH
victron energy
AGM
12-200
victron energy
AGM
12-200